Katalog náhradních dílů
Spare Parts List

GARUDAN®

GF-1116-143 LM

anita

ANITA B, s.r.o.
Průmyslová 2453/7
680 01 Boskovice
Czech Republic
tel: +420 516 454 774
+420 516 453 496
fax: +420 516 452 751
e-mail: info@anita.cz

www.garudan.cz

www.garudan.cz

1、 ARM BED AND ITS ACCESSORIES

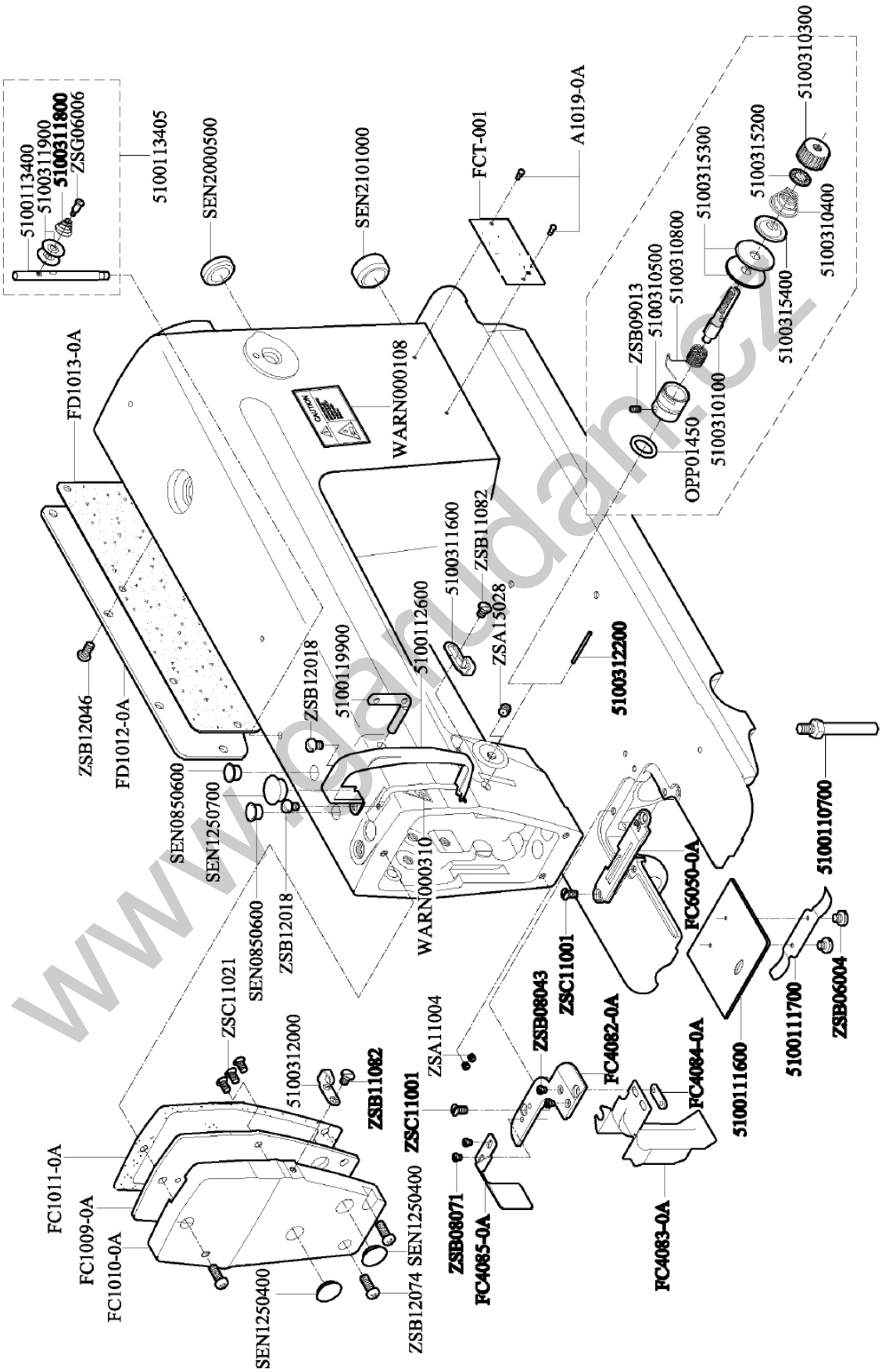

www.gardanet.cz

1. ARM BED AND ITS ACCESSORIES

Part. No.	Description	Qty.
5100110700	Bed Screw Stud	4
5100111600	Slide Plate	1
5100111700	Slide Plate Spring	1
5100112600	Thread Takeup Lever Cover	1
5100113400	Thread Guide Rod	1
5100113405	Needle Thread Guide Pin Asm	1
5100119900	Two Eyelet	1
5100310100	Tension Post	1
5100310300	Tension Nut	1
5100310400	Tension Spring	1
5100310500	Tension Post Socket	1
5100310800	Takeup Spring	1
5100311600	Arm Thread Guide	1
5100311800	Thread Guide Disk Spring	1
5100311900	Thread Guide Disk	2
5100312000	Arm Thread Guide	1
5100312200	Tension Releasing	1
5100315200	Rotating Stopper	1
5100315300	Thread Tension Disk	2
5100315400	Thread Tension Disk Presser	1
A1019-0A	Pin	2
FC1009-0A	Face Plate Cover	1
FC1010-0A	Face Plate Asm	1
FC1011-0A	Face Plate Gasket	1
FC1016-0A	Name Plate	1
FC4082-0A	Needle Plate	1
FC4083-0A	Waste Material Guard	1
FC4084-0A	Waste Material Guard Plate	1
FC4085-0A	Waste Material Guide	1
FC6050-0A	Gauge Plate	1
FD1012-0A	Side Plate	1
FD1013-0A	Gasket	1
OPP01450	Rubber Ring	1
SEN0850600	Rubber Plug	2
SEN1250400	Rubber Plug	2
SEN1250700	Rubber Plug	1
SEN2000500	Rubber Plug	1
SEN2101000	Rubber Plug	1
WARN000310	Paster	1
WARN000108	Paster	1
ZSA11004	Screw (11/64-40×3.5)	2

www.garudan.cz

1、 ARM BED AND ITS ACCESSORIES

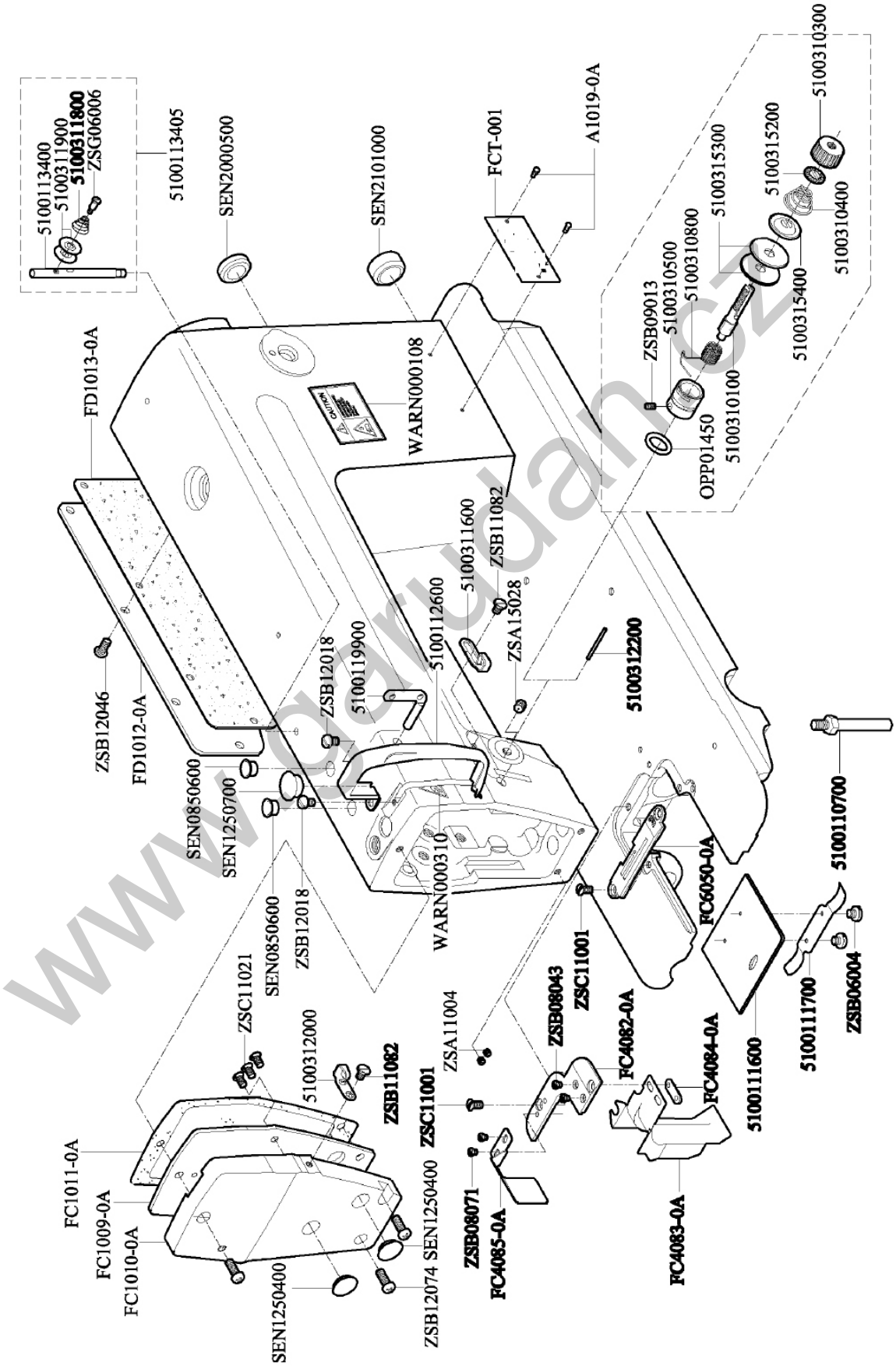

www.garudan.cz

1. ARM BED AND ITS ACCESSORIES

Part. No. / Číslo dílu	Description / Popis	Qty / Ks.
ZSA15028	Screw (15/64-28×7)	1
ZSB06004	Screw (3/32-56×2.2)	2
ZSB08043	Screw (1/8-44×5)	2
ZSB08071	Screw (1/8-44×4)	2
ZSB09013	Screw (9/64-40×4)	1
ZSB11082	Screw (11/64-40×6.5)	2
ZSB12018	Screw (3/16-28×6)	2
ZSB12046	Screw (3/16-28×7)	8
ZSB12074	Screw (3/16-28×16)	3
ZSC11001	Screw (11/64-40×6.5)	4
ZSC11021	Screw (11/64-40×5.5)	3
ZSG06006	Screw (3/32-56×4.2)	1

www.garudan.cz

2. MAIN SHAFT THREAD TAKE-UP LEVER MECHANISM

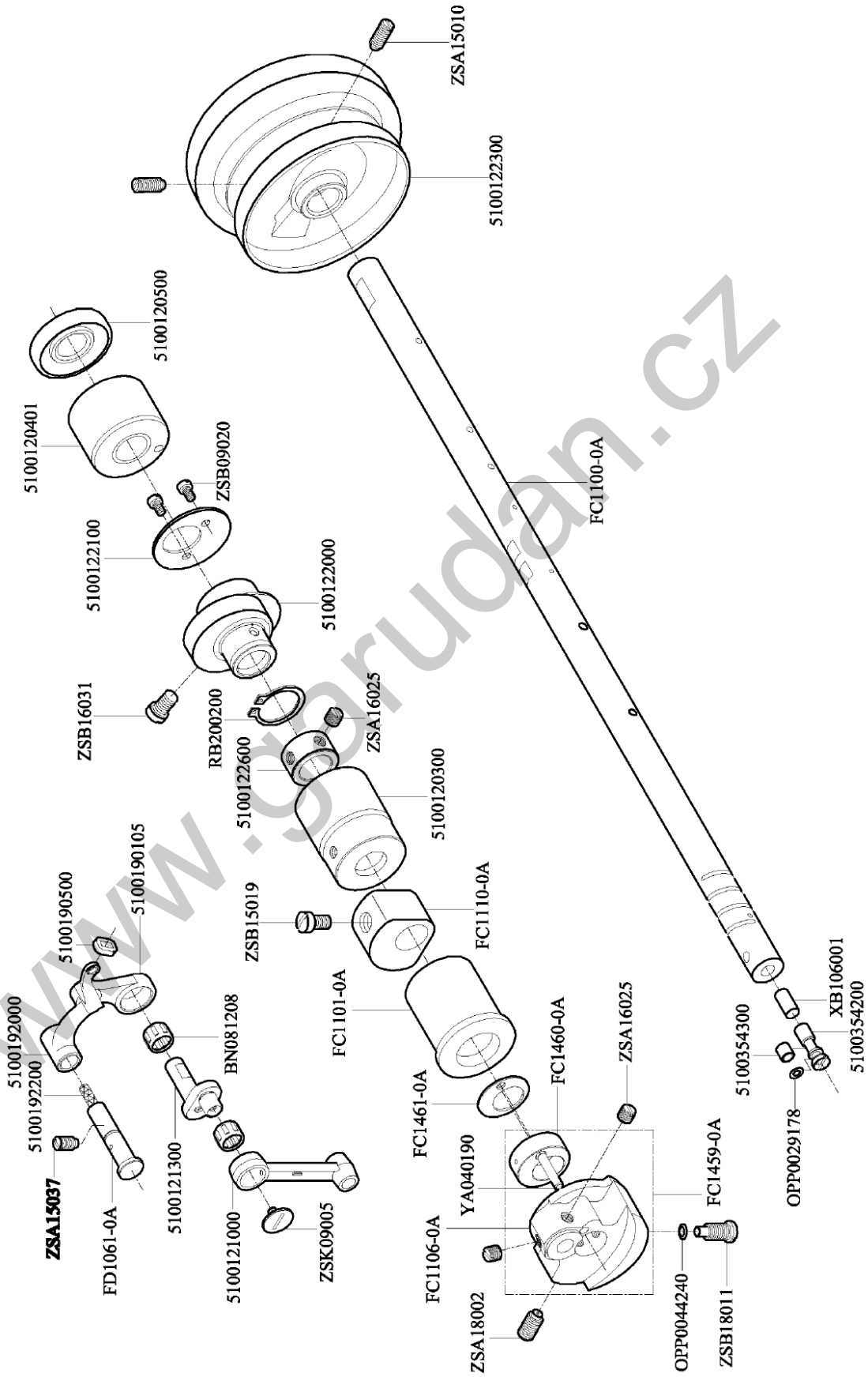

www.gbrudan.cz

2. MAIN SHAFT THREAD TAKE-UP MECHANISN

Part. No. / Číslo dílu	Description / Popis	Qty / Ks.
5100120300	Bushing Intermediate	1
5100120500	Oil Seal	1
5100121000	Needle Bar Crank Rod	1
5100121300	Needle Bar Crank	1
5100122000	Feed Drive Eccentric Cam	1
5100122100	Thrust Collar	1
5100122300	Flywheel Asm	1
5100122600	Thrust Collar Asm	1
5100190105	Thrust Takeup Complete	1
5100190500	Rubber	1
5100192000	Lever	1
5100192200	Oil Thread	1
5100354200	Oil Amount Adjusting Pin	1
5100354300	Oil Adjusting Collar	1
5100120401	Main Shaft Bushing Rear	1
BN081208	Needle Bearing	2
FC1100-0A	Main Shaft	1
FC1101-0A	Bushing Front	1
FC1106-0A	Counter weight	1
FC1110-0A	Balancer	1
FC1459-0A	Knife Cam Asm	1
FC1460-0A	Knife Cam	1
FC1461-0A	Washer	1
FD1061-0A	Thrust Takeup Crank Shaft Asm	1
OPP0029178	Rubber Ring	1
OPP0044240	Rubber Ring	1
RB200200	Snap Ring	1
XB106001	Roller Felt	1
YA040190	Pin	1
ZSA15010	Screw (15/64-28×13)	2
ZSA15037	Screw (15/64-28×8.5)	1
ZSA16025	Screw (1/4-40×6)	4
ZSA18002	Screw (9/32-28×11.5)	1
ZSB09020	Screw (9/64-40×6)	2
ZSB15019	Screw (15/64-28×9)	2
ZSB16031	Screw (1/4-40×11)	2
ZSB18011	Screw (9/32-28×11)	1
ZSK09005	Screw (9/64-40×6)	1

www.garudan.cz

3、 NEEDLE BAR UPRIGHT SHAFT LOWER SHAFT MECHANISM

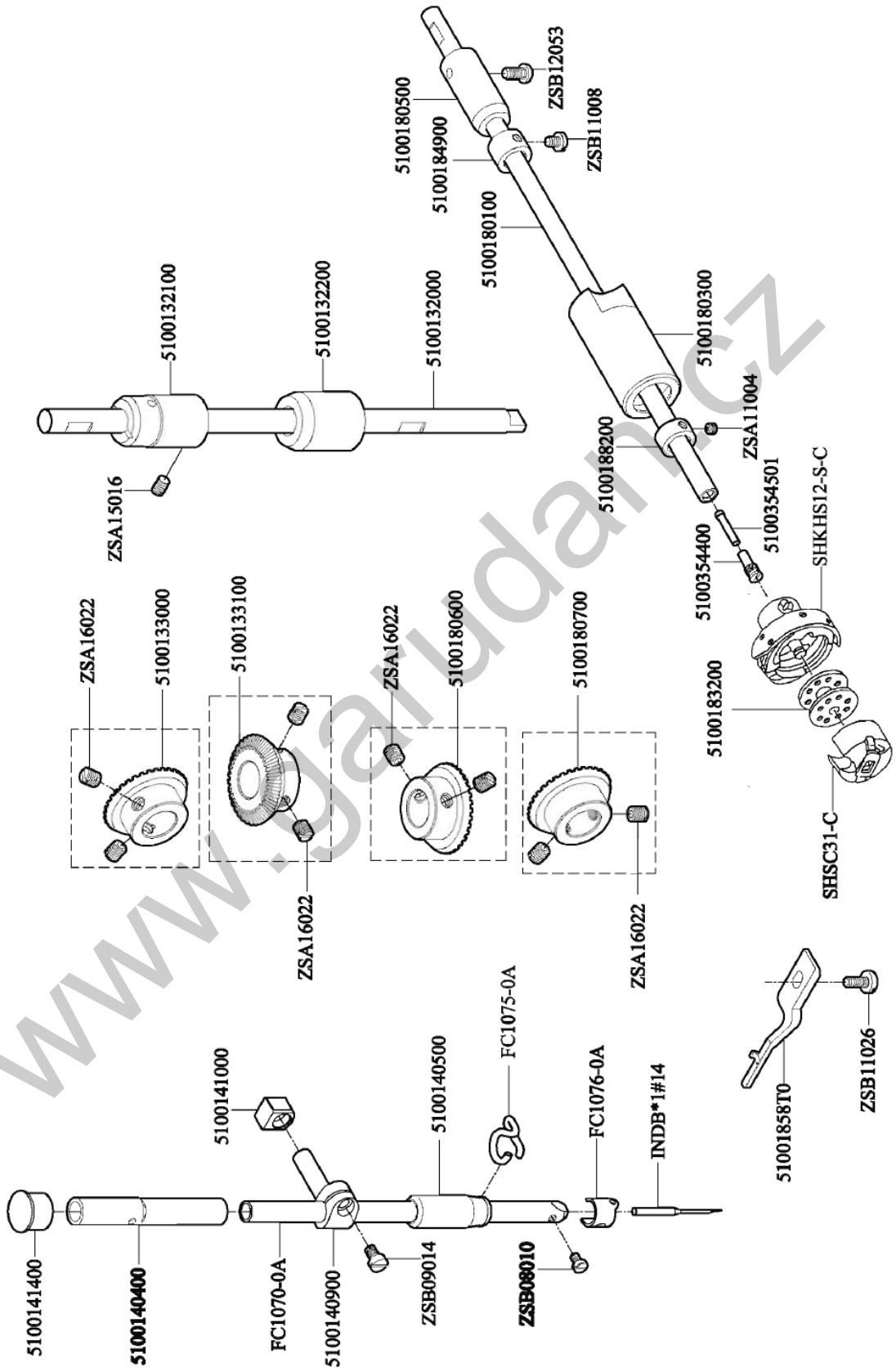

www.garudan.cz

3. NEEDLE BAR UPRIGHT SHAFT LOWER SHAFT MECHANISM

Part. No. / Číslo dílu	Description / Popis	Qty / Ks.
5100132000	Upright Shaft	1
5100132100	Upright Shaft Bushing Upper	1
5100132200	Upright Shaft Bushing Lower	1
5100133000	Gear Asm	1
5100133100	Pinion Asm	1
5100140400	Needle Bar Upper Bushing	1
5100140500	Needle Bar Under Bushing	1
5100140900	Needle Bar Connecting Asm	1
5100141000	Slide Block	1
5100141400	Rubber Plug	1
5100180100	Hook Driving Shaft	1
5100180300	Hook Driving Shaft Bush	1
5100180500	Bushing, Rear	1
5100180600	Gear Asm	1
5100180700	Pinion Asm	1
5100183200	Bobbin	1
5100184900	Thrust Collar Asm	1
5100185100	Hook Asm	1
51001858T0	Bobbin Case Positioning Finger	1
5100188200	Thrust Collar Asm	1
5100354400	Oil Seal Screw	1
5100354501	Oil Wick	1
E6105-0A	Bobbin Case Asm	1
FC1070-0A	Needle Bar	1
FC1075-0A	Thread Guide	1
FC1076-0A	Needle Thread Guide	1
INDB*1#14	Needle	1
ZSA11004	Screw (11/64-40×3.5)	2
ZSA15016	Screw (15/64-28×7)	1
ZSA16022	Screw (1/4-40×7)	8
ZSB08010	Screw (1/8-44×4.6)	1
ZSB09014	Screw (9/64-40×6)	1
ZSB11008	Screw (11/64-40×5)	2
ZSB11026	Screw (11/64-40×10)	1
ZSB12053	Screw (3/16-28×9)	1

www.garudan.cz

4.

PRESSER FOOT MECHANISM

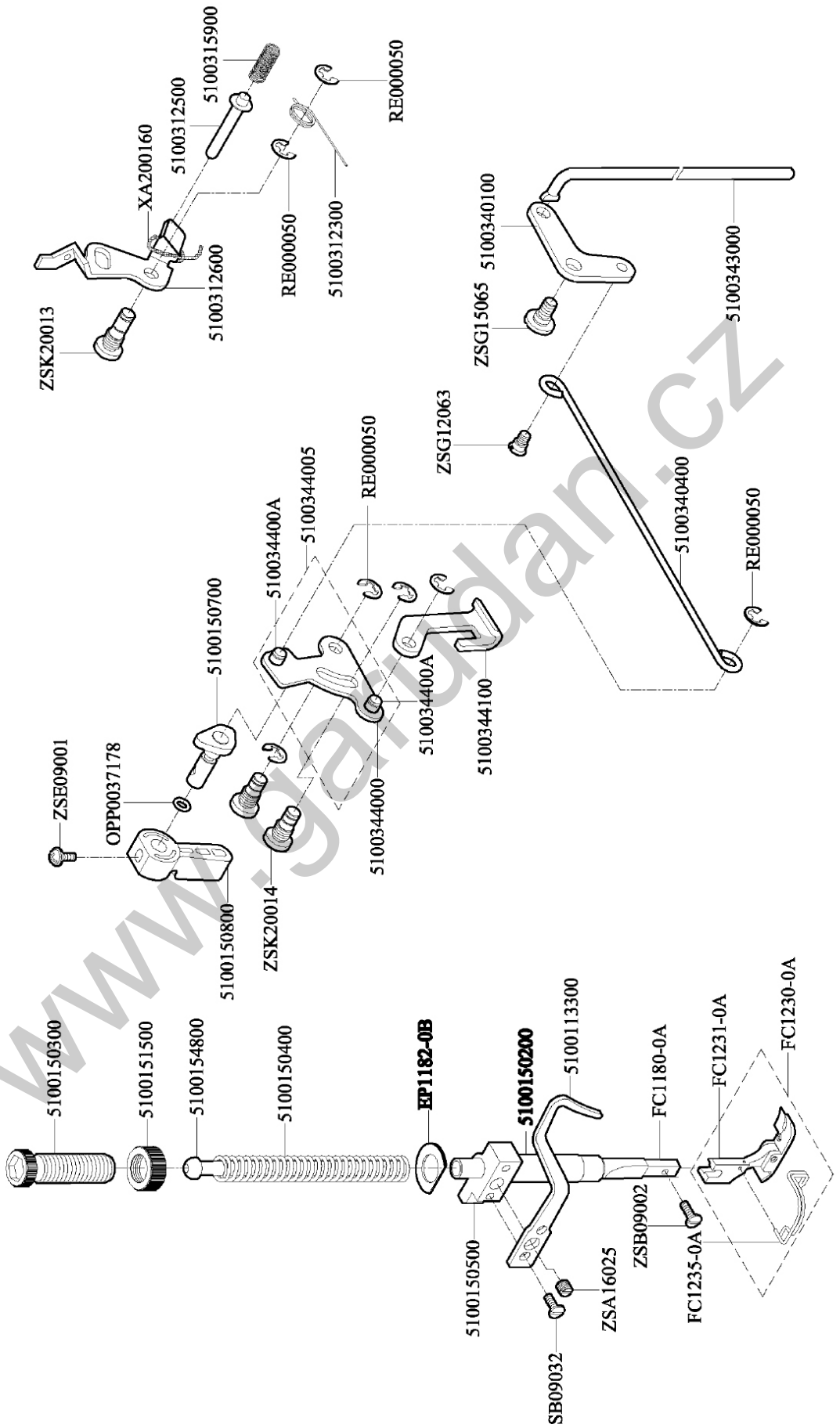

www.galudan.cz

4. PRESSER FOOT MECHANISM

Part. No. / Číslo dílu	Description / Popis	Qty / Ks.
5100113300	Presser Bar Thread Guide	1
5100150200	Presser Bar Bushing Lower	1
5100150300	Screw	1
5100150400	Presser Spring	1
5100150500	Presser Bar Guide Bracket	1
5100150700	Hand Lifter Cam Asm	1
5100150800	Hand Lifter	1
5100151500	Nut	1
5100154800	Presser Guide Bar	1
5100312300	Tension Release Return Spring	1
5100312500	Tension Release Supporting Pin	1
5100312600	Tension Release Plate	1
5100315900	Tension Release Pin Spring	1
5100340100	Knee Lifter Link	1
5100340400	Lifting Lever Connecting Rod	1
5100343000	Knee Lifter Connecting Rod	1
5100344000	Hand Lifter Link	1
5100344005	Hand Lifter Link	1
5100344100	Lifting Lever	1
510034400A	Connecting Pin	2
EP1182-0B	Ring	1
FC1180-0A	Presser Bar	1
FC1230-0A	Presser Foot Asm	1
FC1231-0A	Presser Foot Asm	1
FC1235-0A	Holder	1
OPP0037178	Rubber Ring	1
RE000050	ERing	7
XA200160	Oil Wick	1
ZSA16025	Screw (1/4-40×6)	1
ZSB09002	Screw (9/64-40×10)	1
ZSB09032	Screw (9/64-40×8.5)	2
ZSE09001	Screw (9/64-40×9.6)	1
ZSG12063	Screw (3/16-32×4)	1
ZSG15065	Screw (15/64-28×6.5)	1
ZSK20013	Screw (5/16-24×7)	1
ZSK20014	Screw (5/16-24×7)	2

www.garudan.cz

5. FEED MECHANISM

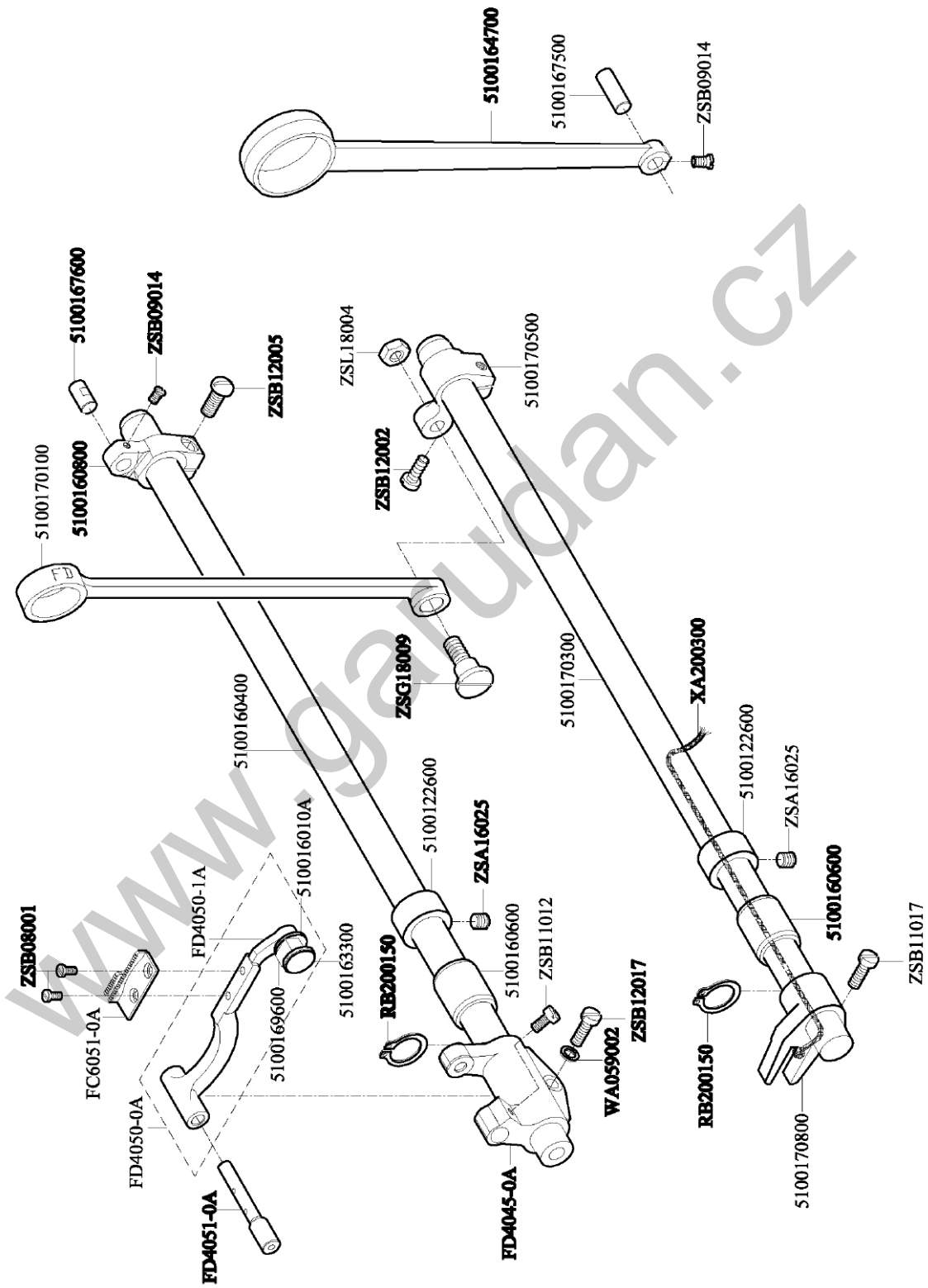

www.garudan.cz

5. FEED MECHANISM

Part. No. / Číslo dílu	Description / Popis	Qty / Ks.
5100122600	Thrust Collar Asm	2
5100160400	Feed Rocker Shaft	1
5100160600	Feed Rocker Shaft Bushing	2
5100160800	Feed Rocker Shaft Crank Asm	1
5100163300	Slide Block Pin	1
5100164700	Rocker Shaft Connecting Rod	1
5100167500	Walking Foot Pin	1
5100167600	Walking Foot Pin	1
5100169600	Slide Block-	1
5100170100	Connecting Rod	1
5100170300	Feed Driving Shaft	1
5100170500	Feed Arm Compl	1
5100170800	Driving Shaft Crank Asm	1
510016010A	Washer	1
FC6051-0A	Feed Dog	1
FD4045-0A	Feed Rocker Asm	1
FD4050-0A	Feed Base Asm	1
FD4050-1A	Feed Base	1
FD4051-0A	Feed Bar Shaft	1
RB200150	Retaining Ring	2
WA059002	Washer	1
XA200300	Oil Wick	1
ZSA16025	Screw (1/4-40×6)	4
ZSB08001	Screw (1/8-44×6)	2
ZSB09014	Screw (9/64-40×6)	2
ZSB11012	Screw (11/64-40×8)	1
ZSB11017	Screw (11/64-40×12)	1
ZSB12002	Screw (3/16-28×12)	1
ZSB12005	Screw (3/16-28×12)	1
ZSB12017	Screw (3/16-28×15)	1
ZSG18009	Screw (9/32-28x12.7)	1
ZSL18004	Nut(9/32-28)	1

www.garudan.cz

6. FEED CONTROL MECHANISM

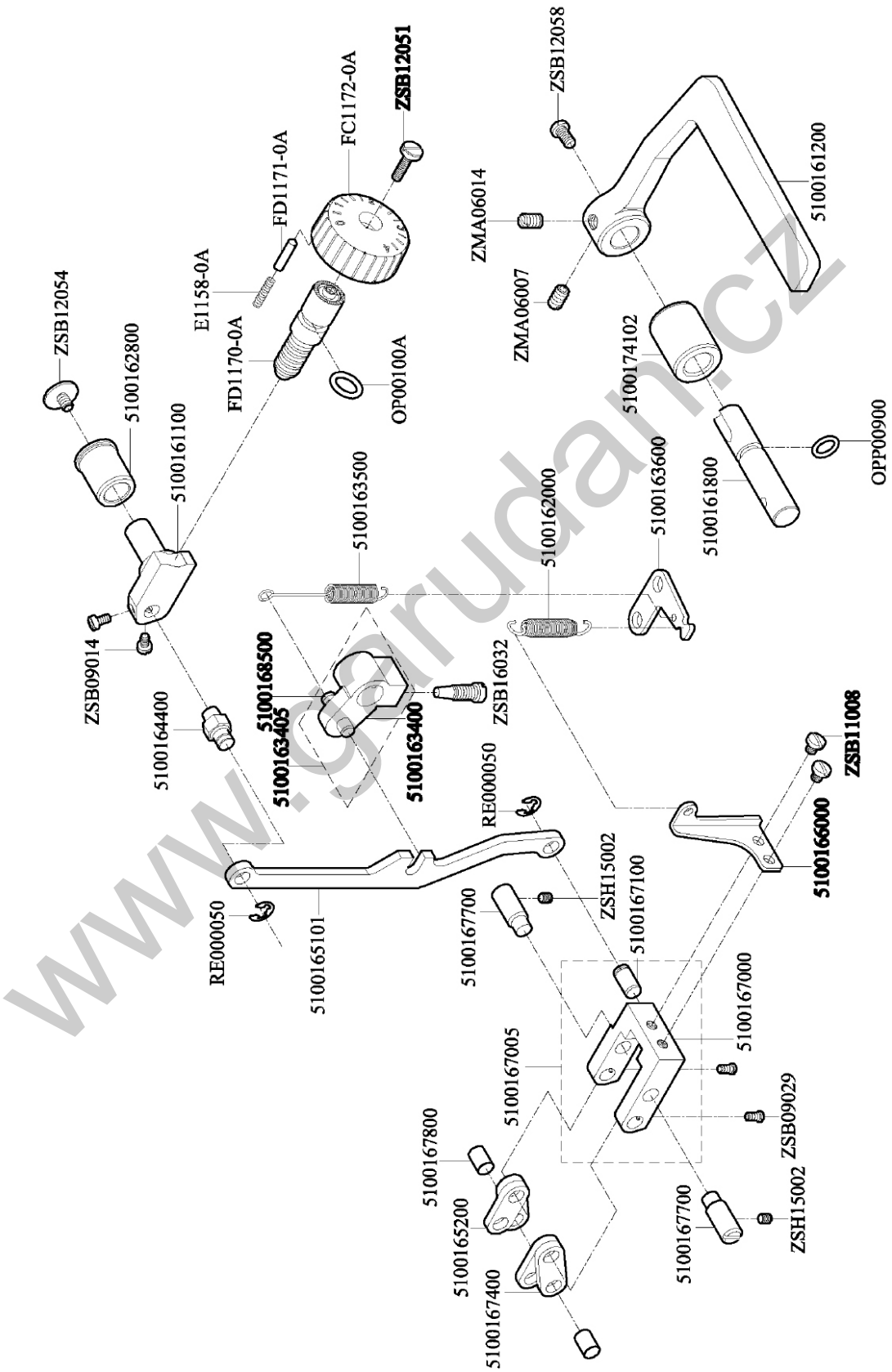

www.garudan.cz

6. FEED CONTROL MECHANISM

Part. No. / Číslo dílu	Description / Popis	Qty / Ks.
5100161100	Feed Regulator	1
5100161200	Reverse Feed Control Lever Asm	1
5100161800	Feed Reverse Shaft	1
5100162000	Adjusting Link Spring	1
5100162800	Feed Regulator Bushing	1
5100163400	Feed Reverse Arm	1
5100163405	Feed Reverse Arm Asm	1
5100163500	Feed Reverse Spring	1
5100163600	Feed Spring Hook	1
5100164400	Feed Regulator Pin	1
5100165101	Feed Regulator Connecting Rod	1
5100165200	Walking Foot Link	2
5100166000	Adjusting Link Spring Guide	1
5100167000	Walking Foot Adjusting Link	1
5100167005	Walking Foot Adjusting Link Asm	1
5100167100	Pin	1
5100167400	Connecting Link	2
5100167700	Pin	2
5100167800	Pin	2
5100168500	Pin	1
5100174102	Feed Lever Metal	1
E1158-0A	Feed Regulator Pin Spring	1
FC1172-0A	Feed Dial	1
FD1170-0A	Screw	1
FD1171-0A	Pin	1
OP00100A	Rubber Ring	1
OPP00900	Rubber Ring	1
RE000050	E-Ring	2
ZMA06007	Screw (M6-1.0×9.5)	1
ZMA06014	Screw (M6-1.0×10)	1
ZSB09014	Screw (9/64-40×6)	2
ZSB09029	Screw (9/64-40×6)	2
ZSB11008	Screw (11/64-40×5)	2
ZSB12051	Screw (3/16-28×18)	1
ZSB12054	Screw (3/16-28×7)	1
ZSB12058	Screw (3/16-32×6.5)	1
ZSB16032	Screw (1/4-40×15)	1
ZSH15002	Screw (15/64-28×8)	2

www.garudan.cz

7、 **KNIFE MECHANISM**

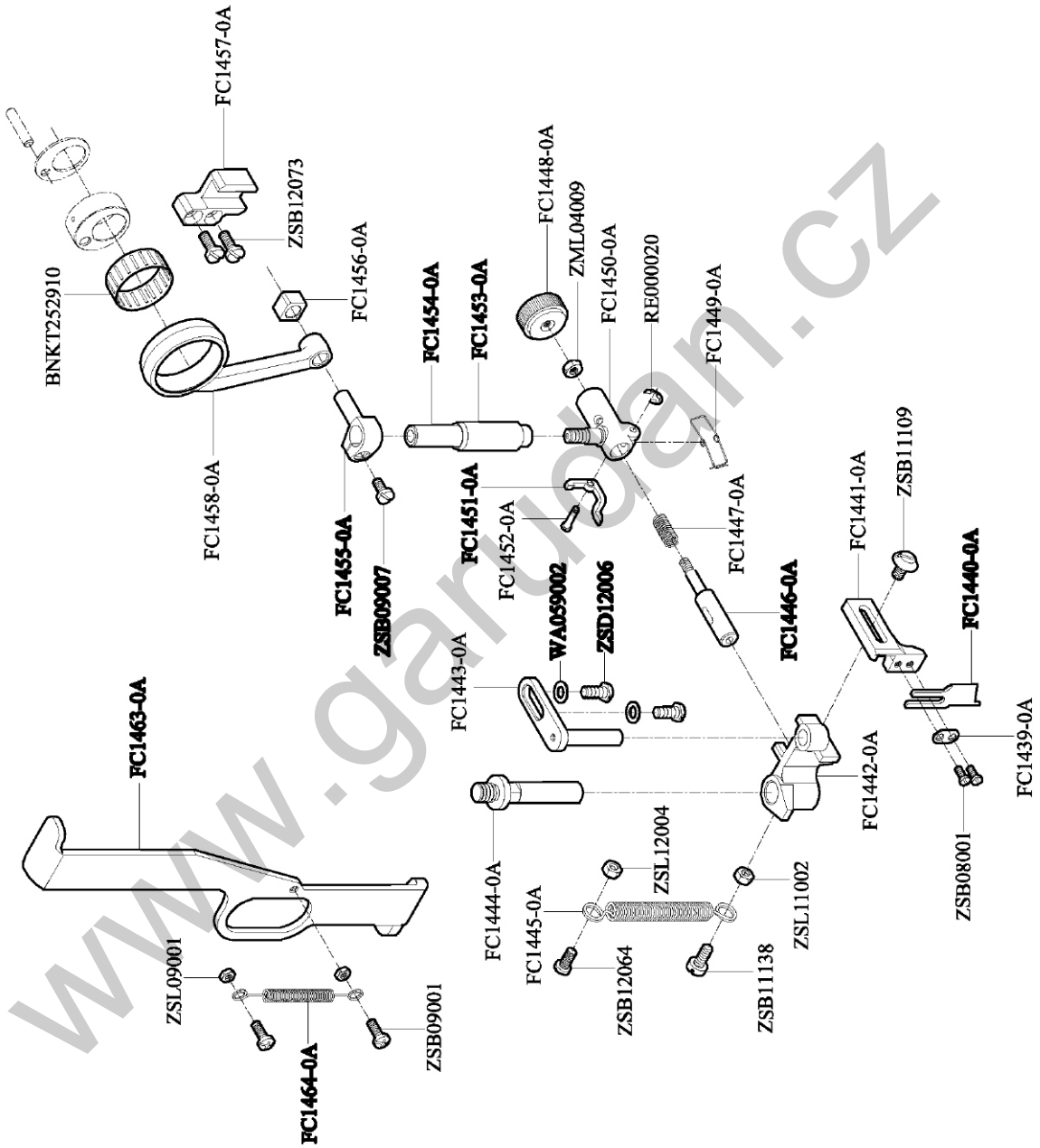

www.garlopan.cz

7. KNIFE MECHANISM

Part. No. / Číslo dílu	Description / Popis	Qty / Ks.
BNKT252910	Knife Needle Bearing	1
FC1439-0A	Washer	1
FC1440-0A	Knife	1
FC1441-0A	Knife Holder	1
FC1442-0A	Knife Driving Block	1
FC1443-0A	Guide Stud For Knife Driving	1
FC1444-0A	Knife Driving Block Stud	1
FC1445-0A	Tension Spring	1
FC1446-0A	Knife Driving Rod Clutch Pin	1
FC1447-0A	Spring	1
FC1448-0A	Knife Driving Rod Clutch Knob	1
FC1449-0A	Spring	1
FC1450-0A	Knife Driving Rod Clutch Retai	1
FC1451-0A	Knife Release Lever	1
FC1452-0A	Knife Release Lever Pin	1
FC1453-0A	Bushing	1
FC1454-0A	Knife Driving Stud	1
FC1455-0A	Knife Driving Stud Connection	1
FC1456-0A	Slide Block	1
FC1457-0A	Slide Block Guide	1
FC1458-0A	Knife Driving Rod	1
FC1463-0A	Knife Positioning Plate	1
FC1464-0A	Tension Spring-	1
RE000020	E-Ring	1
WA059002	Washer	2
ZML04009	Screw (M4-0.7)	1
ZSB08001	Screw (1/8-44×6)	2
ZSB09007	Screw (9/64-40×7.5)	1
ZSB09001	Screw (9/64-36×6.2)	2
ZSB11109	Screw (11/64-40×8)	1
ZSB11138	Screw (11/64-40×9.5)	1
ZSB12064	Screw (3/16-28×10)	1
ZSB12073	Screw (3/16-28×9.5)	2
ZSD12006	Screw (3/16-32×8.5)	2
ZSL09001	Nut(9/64-40)	2
ZSL11002	Nut(11/64-40)	1
ZSL12004	Nut(3/16-28)	1

www.garudan.cz

8. OIL LUBRICATION MECHANISM

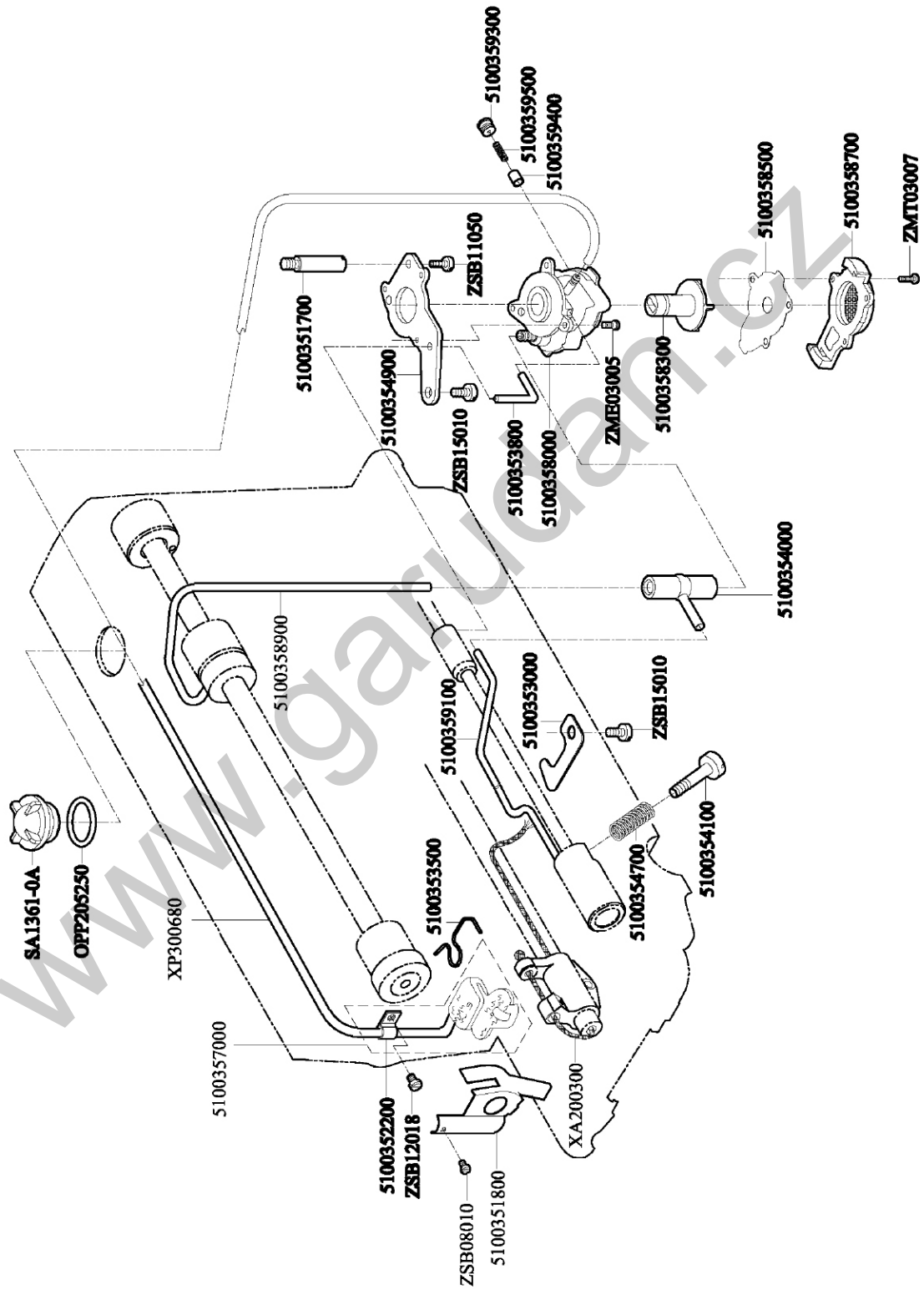

www.garudan.cz

8. OIL LUBRICATION MECHANISM

Part. No. / Číslo dílu	Description / Popis	Qty / Ks.
5100351700	Oil Pump Support	1
5100351800	Holder	1
5100352200	Holder	1
5100353000	Pipe Holder Lower	1
5100353500	Oil Felt Presser	1
5100353800	Hook Driving Shaft Oil Tube	1
5100354000	Rubber Joint	1
5100354100	Oil Adjusting Screw	1
5100354700	Oil Regulator Screw Spring	1
5100354900	Oil Pump Installing Base	1
5100357000	Oil Return Tube Asm	1
5100358000	Oil Pump	1
5100358300	Oil Pump Impeller	1
5100358500	Oil Pump Impeller Cover	1
5100358700	Lubricating Oil Pump Cover	1
5100358900	Oil Tube	1
5100359100	Oil Wick Asm	1
5100359300	Plunger Screw	1
5100359400	Plunger	1
5100359500	Plunger Spring	1
SA1361-0A	Oil Sight Window	1
OPP205250	Rubber Ring	1
XA200300	Oil Wick	1
XP300680	Oil Tube	1
ZME03005	Screw (M3-0.5×7.5)	3
ZMT03007	Screw	3
ZSB08010	Screw (1/8-44×4.6)	1
ZSB11050	Screw (11/64-40×10.5)	1
ZSB12018	Screw (3/16-28×6)	1
ZSB15010	Screw (15/64-28×10)	2

www.garudan.cz

9. ACCESSORIES (—)

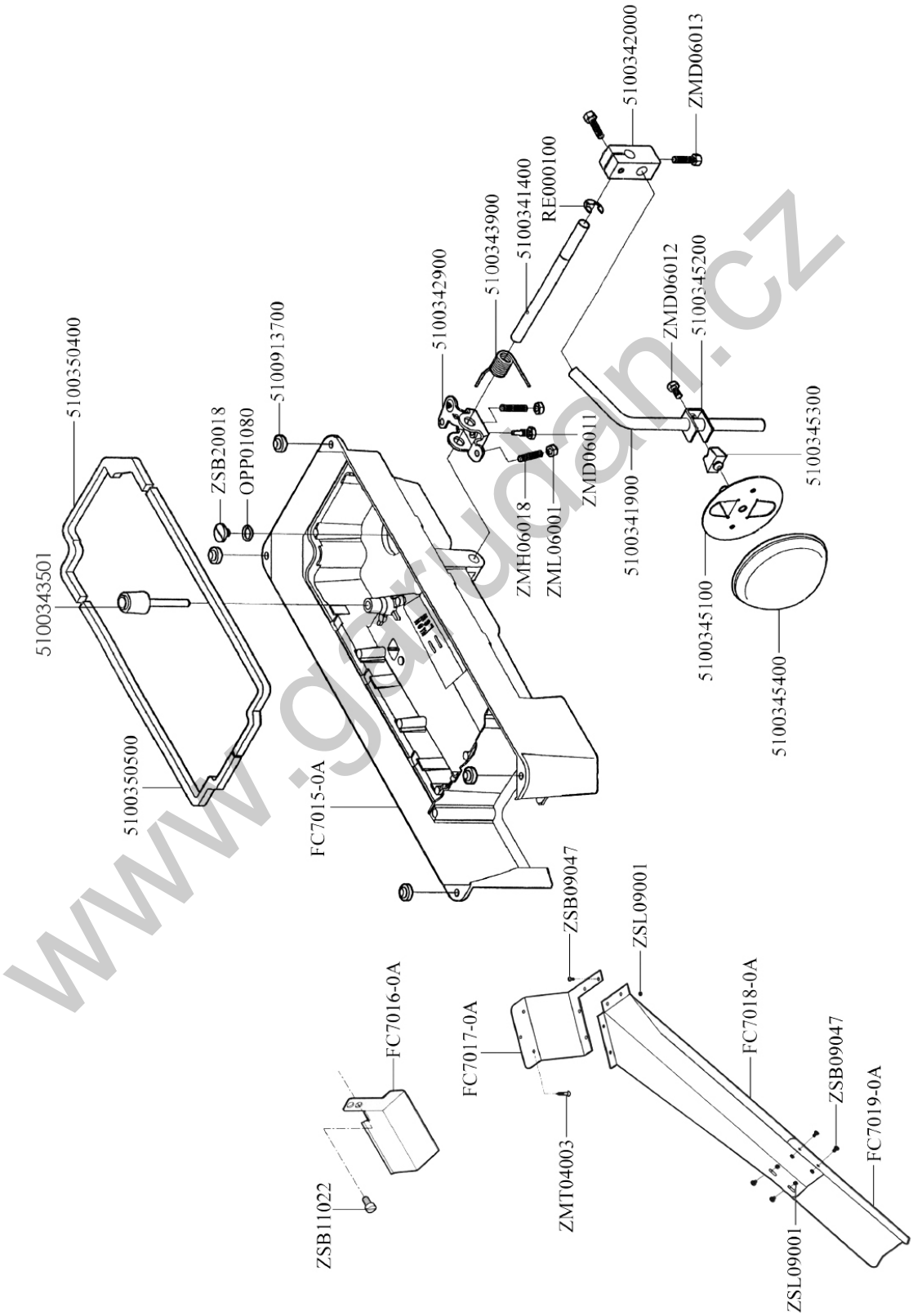

www.garuda.cz

9. ACCESSORIES

Part. No. / Číslo dílu	Description / Popis	Qty / Ks.
5100341400	Knee Press Cross Shaft	1
5100341900	Knee Lifter Plate Rod	1
5100342000	Bracket	1
5100342900	Knee Lifter Rotation Arm	1
5100343501	Knee Press Lifter Rod	1
5100343900	Spring	1
5100345100	Knee Press Plate	1
5100345200	Knee Press Plate Holder	1
5100345300	Rubber	1
5100345400	Knee Press Plate Cover	1
5100350400	Oil Reservoir Rubber Cushion-	1
5100350500	Oil Reservoir Rubber Cushion-	2
5100913700	Rubber Cushion	4
FC7015-0A	Oil Reservoir	1
FC7016-0A	Oil Stopper Plate Asm	1
FC7017-0A	Waste Material Chute Holder	1
FC7018-0A	Waste Material Chute Large	1
FC7019-0A	Waste Material Chute Small	1
OPP01080	Rubber Ring	1
RE000100	E-Ring	1
ZMD06011	Screw (M6-1.0×10)	1
ZMD06012	Screw (M6-1.0×11.6)	1
ZMD06013	Screw (M6-1.0×21)	2
ZMH06018	Screw (M6-1.0×30)	2
ZML06001	Nut (M6-1.0)	2
ZMT04003	Screw	3
ZSB09047	Screw (9/64-40×7)	8
ZSB11022	Screw (11/64-40×7)	2
ZSB20018	Screw (5/16-24×7)	1
ZSL09001	Nut(9/64-40)	8

www.garudan.cz

10. ACCESSORIES (二)

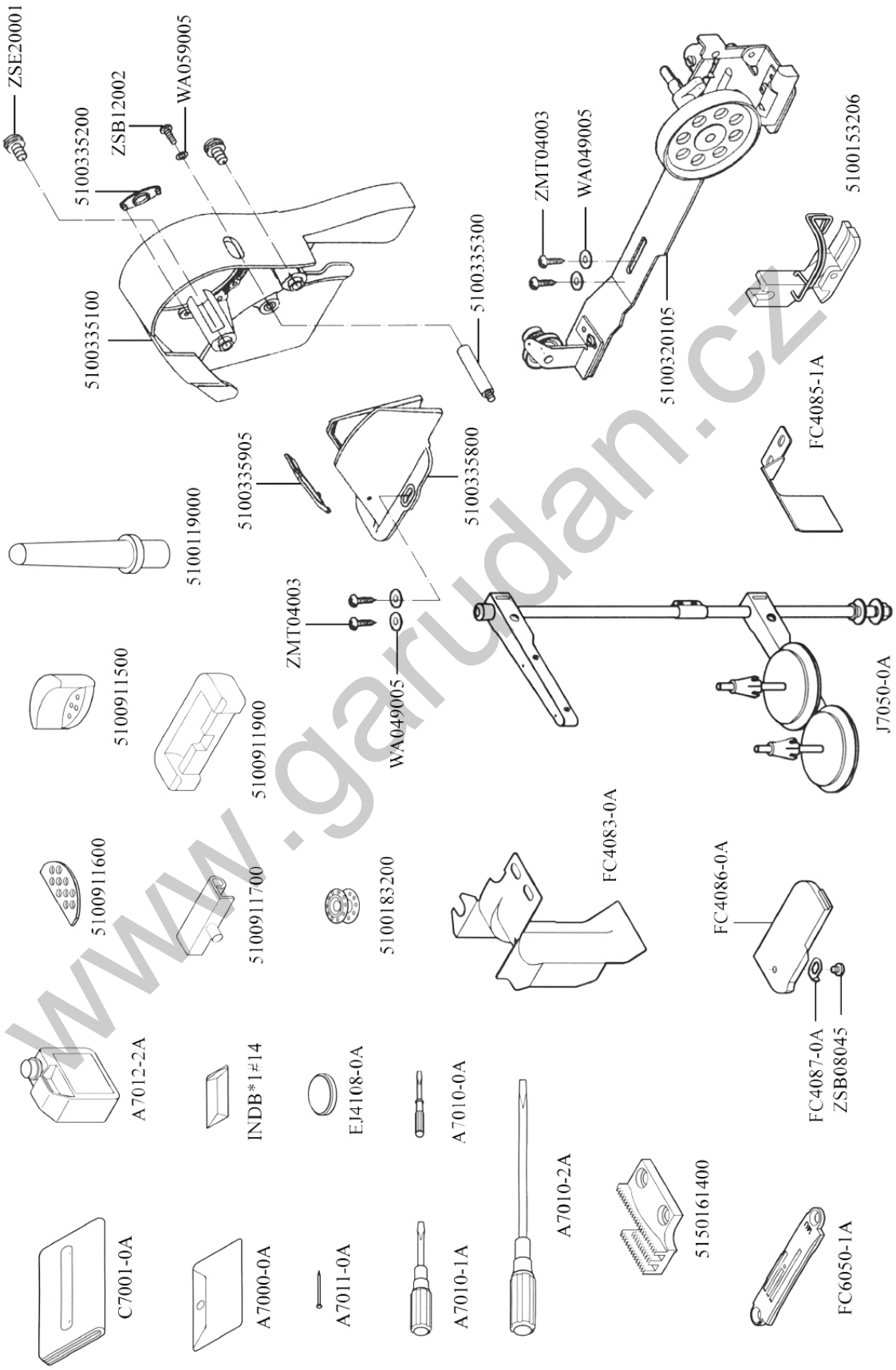

www.garudan.cz

10. ACCESSORIES

Part. No. / Číslo dílu	Description / Popis	Qty / Ks.
5100153206	Presser Foot Asm	1
5100119000	Support	1
5100183200	Bobbin	4
5100320105	Bobbin Winder Compl	1
5100335100	Belt Cover A	1
5100335200	Belt Cover A Cap	1
5100335300	Belt Cover Support A	1
5100335800	Belt Cover B	1
5100335905	Belt Cover B Cap Asm	1
5100911500	Oil Reservoir Rubber Cushion	2
5100911600	Oil Reservoir Rubber Cushion	2
5100911700	Button	2
5100911900	Button Backet	2
5150161400	Feed Dog	1
A7000-0A	Accessory Bag	1
A7010-0A	Screw Driver (Small)	1
A7010-1A	Screw Driver (Medium)	1
A7010-2A	Screw Driver (Large)	1
A7011-0A	Nail	8
A7012-2A	Oiler (Large)	1
C7001-0A	Vinyl Cover	1
EJ4108-0A	Magnet	1
FC4083-0A	Waste Material Guard	1
FC4085-1A	Waste Material Guide	1
FC4086-0A	Plate Cover	1
FC4087-0A	Slide Plate Spring	1
FC4065-1A	Gange Plate	1
INDB*1#14	Needle	4
J7050-0A	Thread Stand	1
WA049005	Washer	4
WA059005	Washer	1
ZMT04003	Wood Screw	4
ZSB08045	Screw (3/16-28×12)	1
ZSB12002	Screw (3/16-28×12)	1
ZSE20001	Screw (5/16-24×15)	2

www.garudan.cz